Horizontal Panel

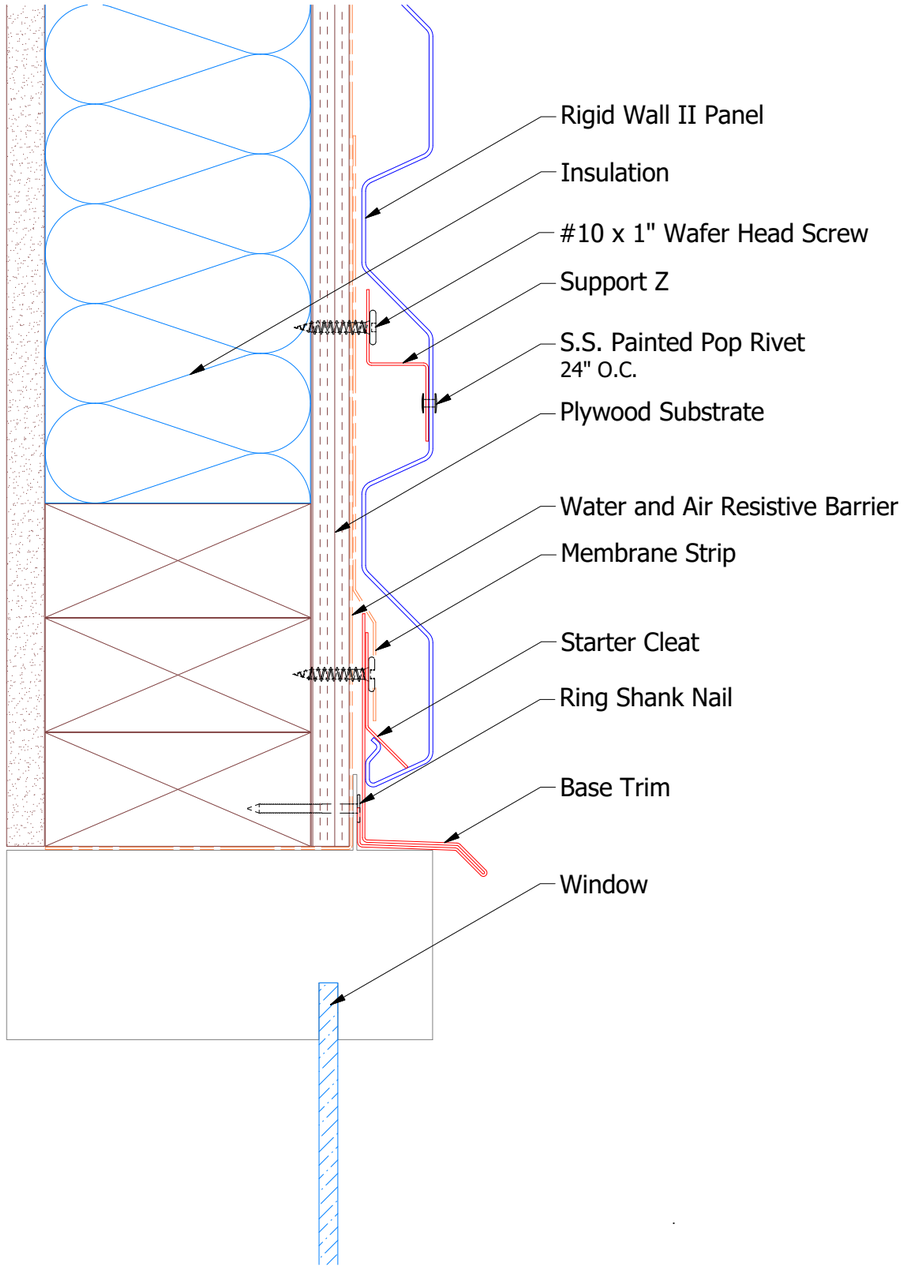

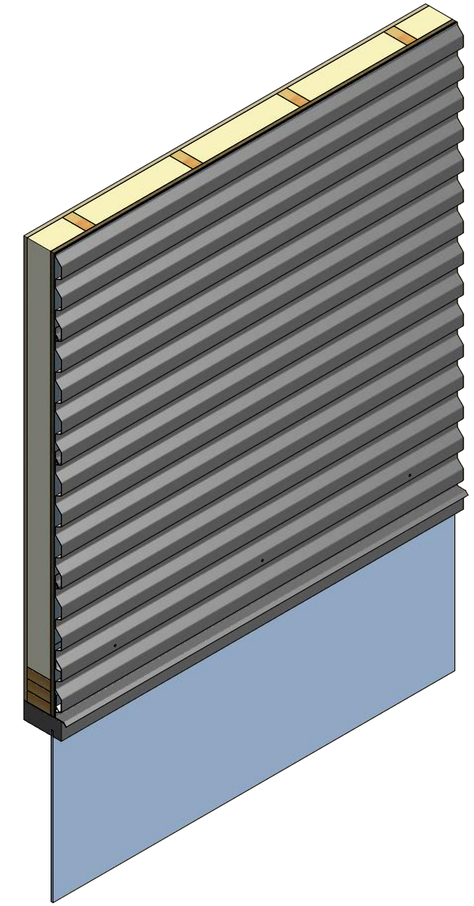

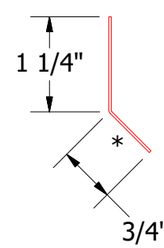

Starter Cleat

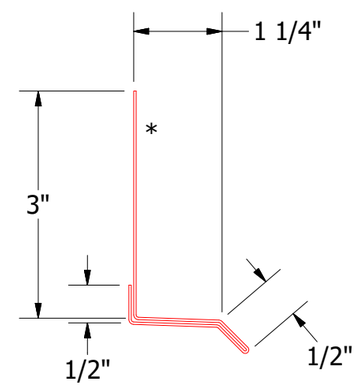

MCA661 - Base Trim

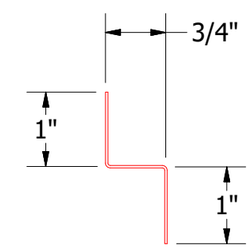

MCA681 - Support Z

ATAS INTERNATIONAL, INC
Allentown PA
610-395-8445
Mesa AZ
480-558-7210

TITLE Rigid Wall II Head Window Flange Detail

REV. NO.	DATE	DESCRIPTION OF REVISION	BY	APP

DWG. NO.	DR JAC	DATE 8/2/2018	
	APP	DATE	
MATERIAL	SH. SIZE B	SCALE X:X	