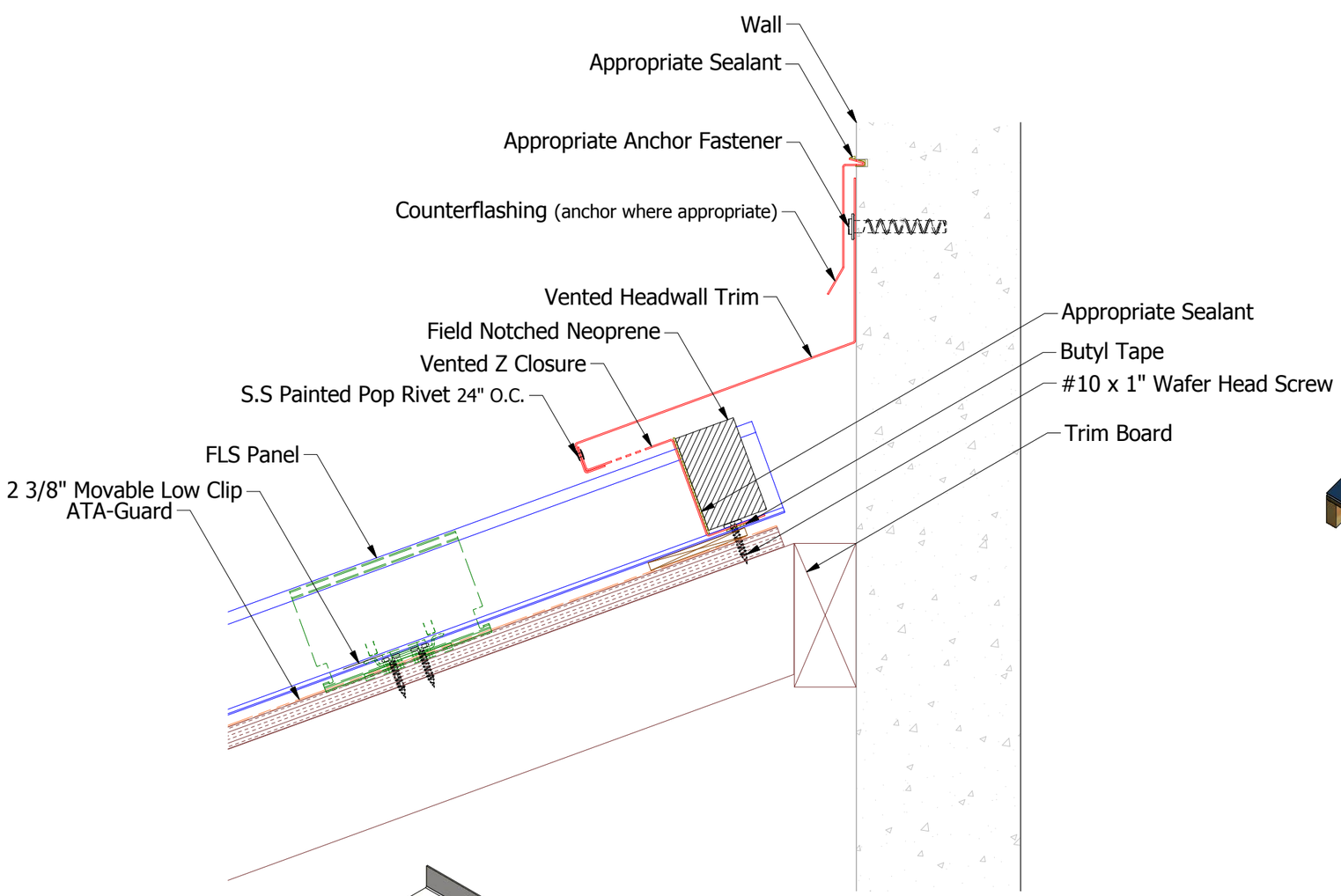


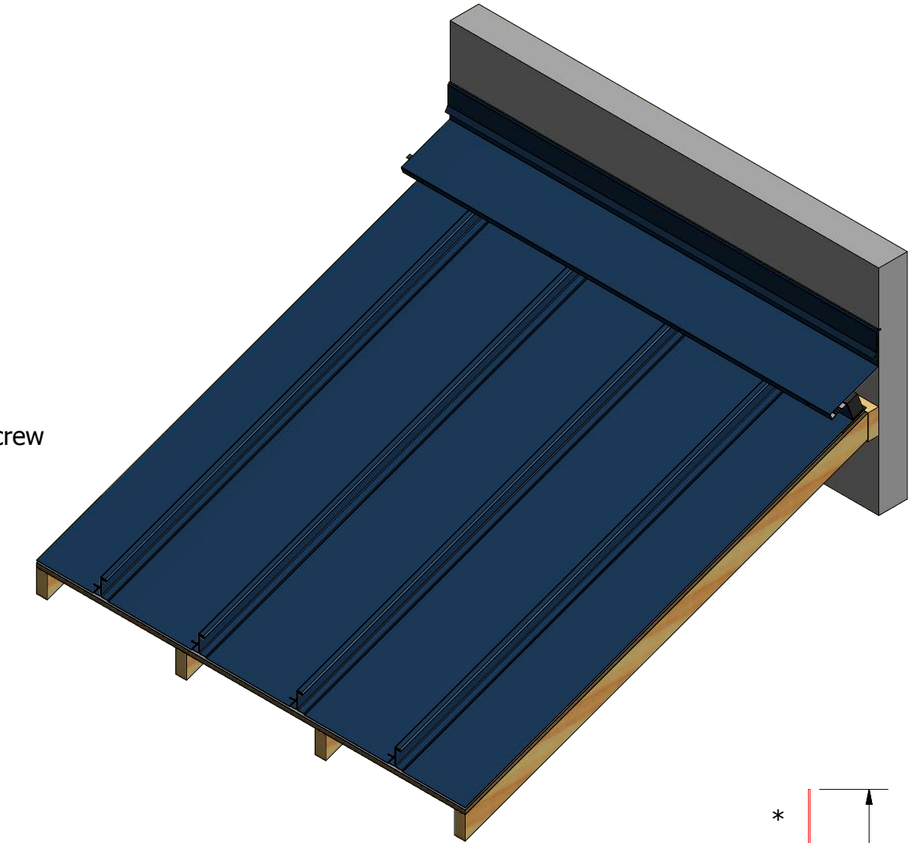

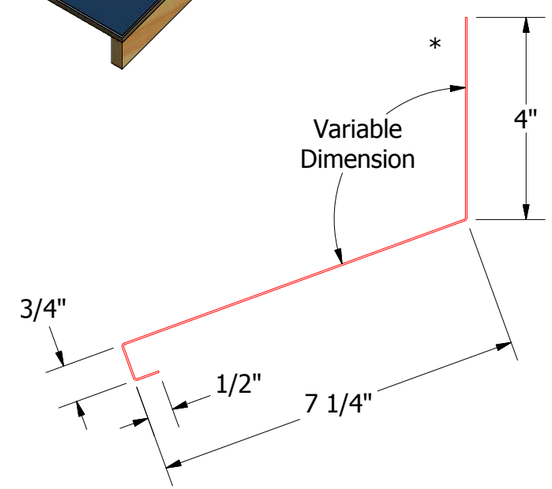


FLA510-Vented Headwall Trim

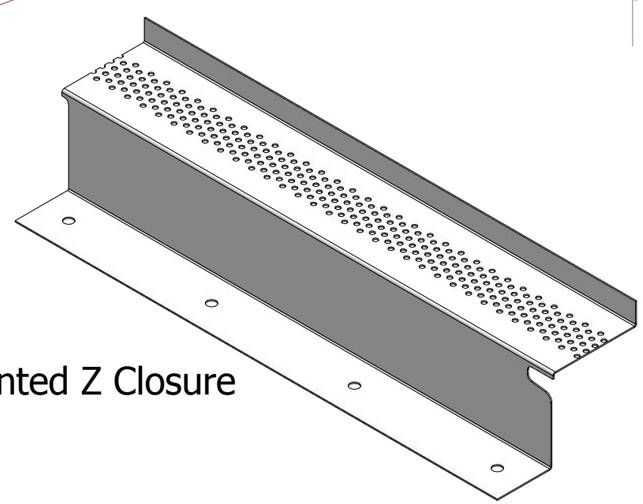

Factory Pre Notched Vented Z Closure

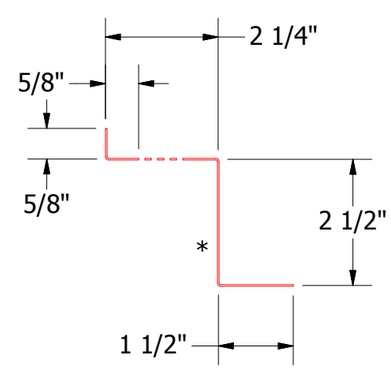


FLA911-Vented Z Closure

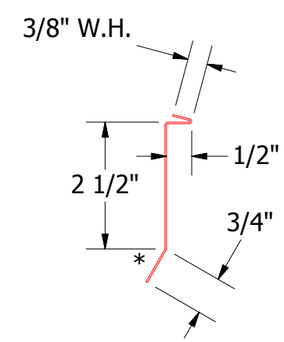


FLA980-Counterflashing

**Note:** * denotes color side.

**Note:** Neoprene Closures are not required if Factory Pre Notched Vented Z Closures are utilized.

| REV. NO. | DATE | DESCRIPTION OF REVISION | BY | APP |
|---|---|---|---|---|
| 2 | 5/31/2019 | Updated Clip Information | AJZ | KRK |
| 1 | 6/26/18 | Updated model and cleaned up the dimensions | JC | |

ATAS INTERNATIONAL, INC
Allentown PA
610-395-8445
Mesa AZ
480-558-7210

TITLE: FLS Vented Headwall Detail

DWG. NO.

MATERIAL

DR: KRK | DATE: 10/8/2014

APP | DATE

SH. SIZE: B | SCALE: X:X