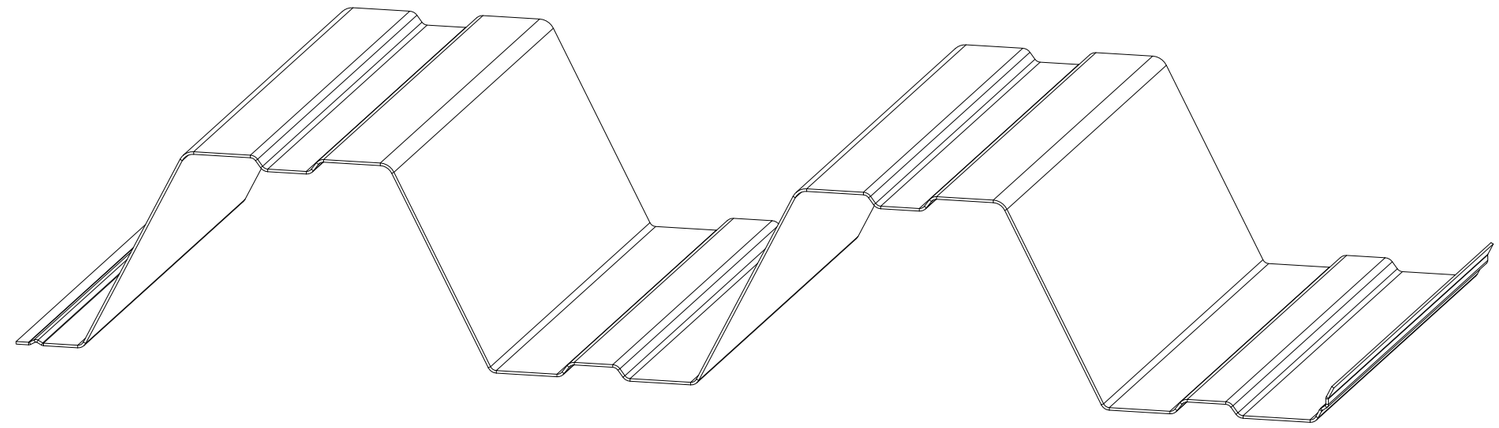

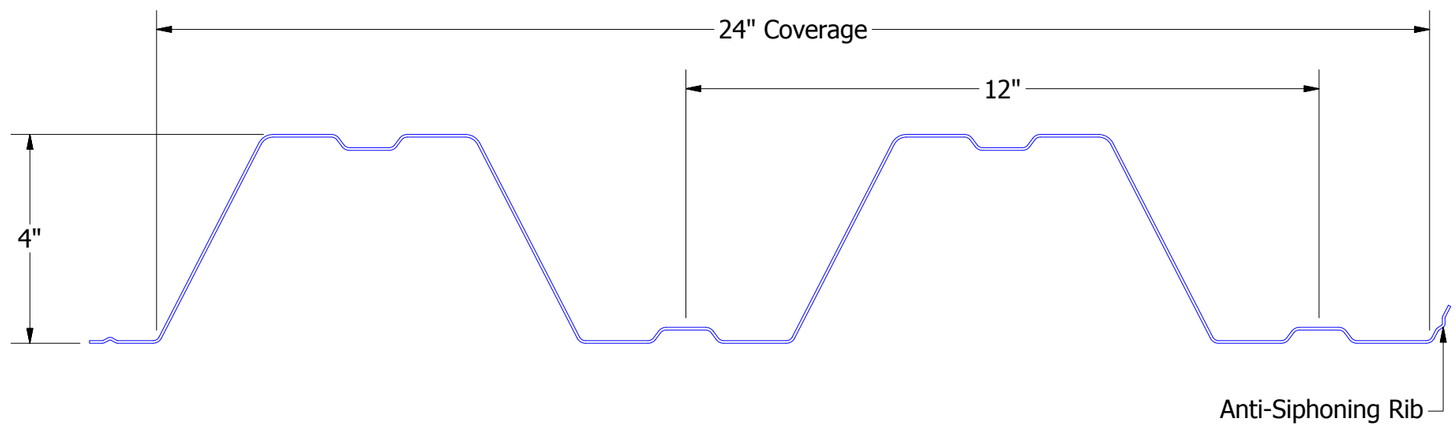

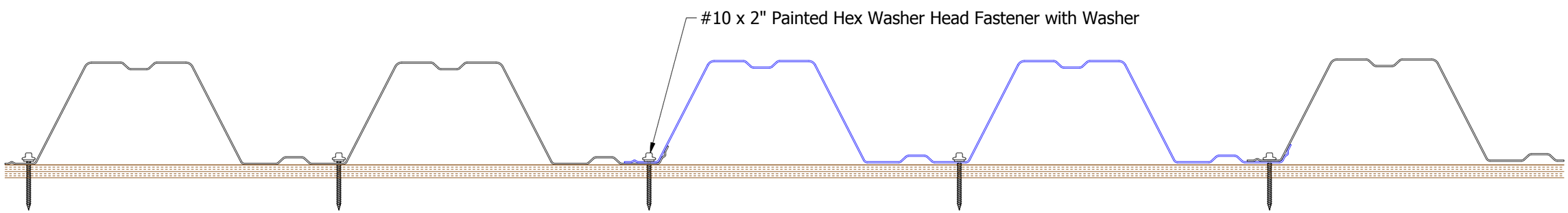

ATAS INTERNATIONAL, INC
Allentown PA
610-395-8445
Mesa AZ
480-558-7210

REV. NO.	DATE	DESCRIPTION OF REVISION	BY	APP

TITLE	Span Wall Panel Detail		
DWG. NO.		DR MBP	DATE 7/27/2016
MATERIAL		APP DAS	DATE 7/27/16
		SH. SIZE B	SCALE X:X