# Horizontal Panel

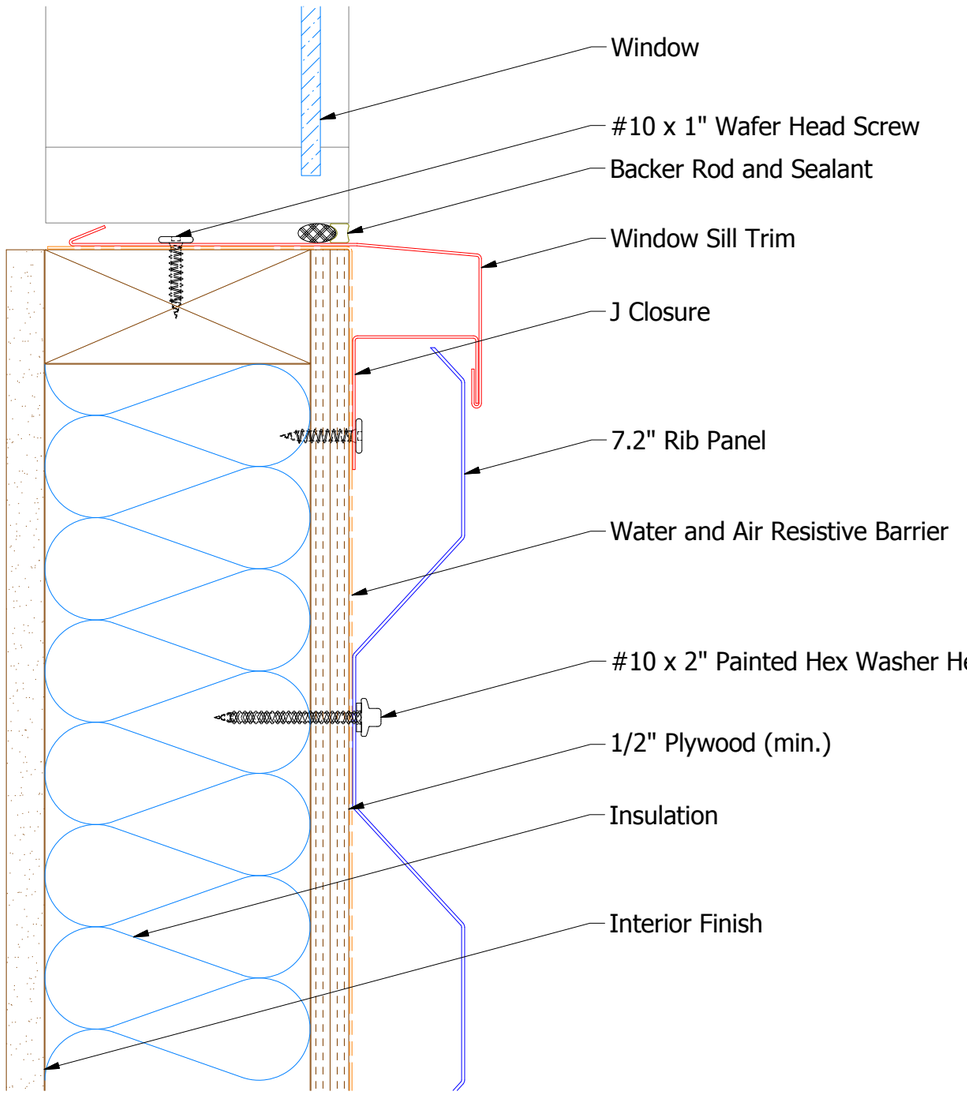


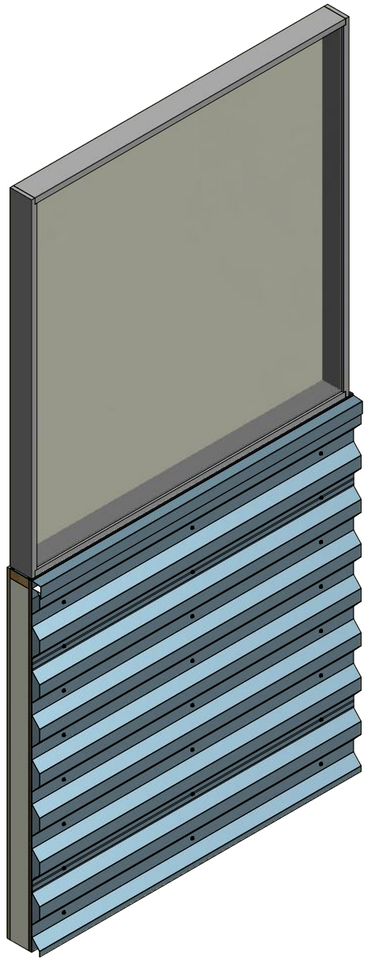

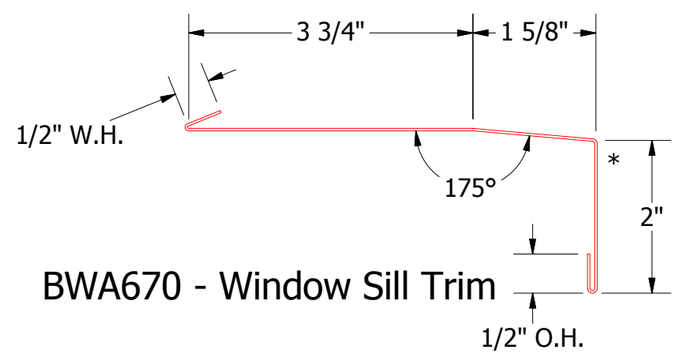


BWA670 - Window Sill Trim

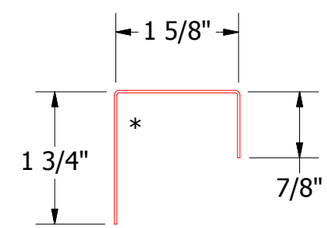


BWA270 - J Closure

ATAS INTERNATIONAL, INC
Allentown PA
610-395-8445
Mesa AZ
480-558-7210

| REV. NO. | DATE | DESCRIPTION OF REVISION | BY | APP |
|---|---|---|---|---|
| | | | | |
| | | | | |
| | | | | |

| | | | |
|---|---|---|---|
| TITLE | 7.2 inch Window Sill Detail | | |
| DWG. NO. | | DR KRK | DATE 2/2/2016 |
| MATERIAL | | APP DAS | DATE 7/20/16 |
| | | SH. SIZE B | SCALE X:X |